SONNEMAN

Project:

Ray 5-Light Round Chandelier

SKU: 2035.73K

Juxtaposing formal structure with playful geometry, Ray offers an inventive array of LED luminaires with delicate arms and soft shades that come together to create a modernist statement piece. The chandelier design geometrically spaces light evenly around a room through three, five, or six luminaires. Ray Chandeliers include a stem kit that allows the fixture to be installed at various hanging heights. Ray is available in three body finishes and five interchangeable shade finishes, including a signature Oxide Red finish. Ray is also available as a wall lamp.

Learn more: https://sonnemanlight.com/ray-chandelier

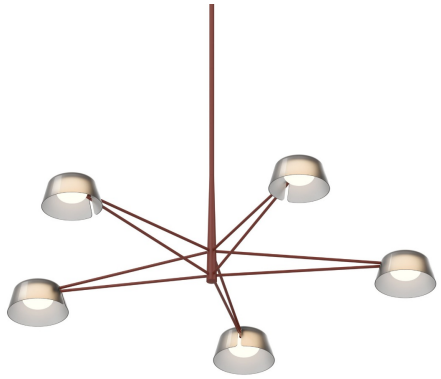

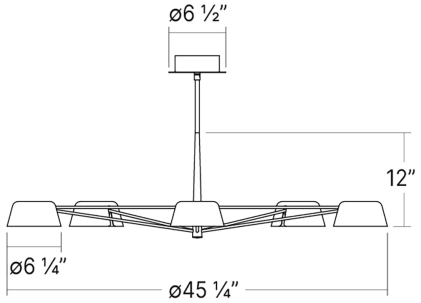

Dimensions

Height	**12"**
Diameter	**45.5"**
Size	**5 Light**
Canopy/Backplate/Base	**6.5"**

Electrical Specs

Bulb(s) Included?	**Yes**
Bulb 1 Type	**Integral LED**
Total LED, Bulb or Socket Count	**5**
Input Voltage	**120-277VAC**
Wattage	**9**
Initial Lumens	**5000**
Delivered Lumens	**3000**
Kelvin	**3000K**
CRI	**90**
Power Supply Type	**Driver**
Power Supply Quantity	**1**
Power Supply Location	**Canopy**
Dimming Type	**TRIAC/ELV/0-10V**

Installation

Installation	**Licensed electrician required**
Sloped Ceiling Compatible?	**Not Compatible**
Installation Orientation	**N/A**
Minimum Hanging Height	**15"**
Maximum Hanging Height	**57"**

Diffuser(s), Shade(s) and Lens(es)

Diffuser Type	**Smoked Etched Acrylic**

General Listings

Color/Finish	**Oxide Red (.73)**
Features	**Damp Rated**
Certification	**C-ETL-US**

Available Finishes

Available Finishes	**Oxide Red (.73), Warm Gray (.17), Satin Black (.25)**

Available Color Temperatures

Available Color Temperatures	**3000k**

©2025 Sonneman A Way of Light. All rights reserved.