INSTALLATION INSTRUCTIONS

Item#72253-66

READ AND SAVE THESE INSTRUCTIONS

WARNING! SHUT POWER OFF AT FUSE OR CIRCUIT BREAKER.

AVERTISSEMENT! COUPER LE COURANT AU NIVEAU DES FUSIBLES OU DU DISJONCTEUR.

ASSEMBLING THE FIXTURE (Fig.2)

1. Shut off power at the fuse box or circuit breaker box and remove the old fixture including the mounting hardware.
2. Carefully unpack your new fixture and lay out all the parts in a clear area. Take care not to misplace any small parts necessary for installation.
3. Use suction cup (I) to install 2-35W GU10 Halogen or LED equivalent bulb (H) (bulb excluded) in accordance with the fixture specification. **(DO NOT EXCEED THE MAXIMUM WATTAGE RATING!). (NE PAS DEPASSER LA PUISSANCE NOMINALE MAXIMALE!)**
4. Insert the glass (J) from the bottom, and secure with glass holder (K) and screw (L).

MOUNTING THE FIXTURE (Fig.1)

5. Thread the mounting screws (A) into the pre-drilled holes in the mounting plate (C) spaced the same distance apart as the holes in the back plate of the fixture body. The length of mounting screws (A) may be adjusted if necessary.
6. Attach the mounting plate (C) to the outlet box (not included) using the outlet box screws (D) (size: #8-32N*L0.78”). The side of mounting plate (C) marked “GND” must face out.

CONNECTING THE WIRES (Fig. 3)

7. Connect the fixture wires as shown in Fig.3, making sure that all wire connectors are secured. If your outlet box has a ground wire (green or bare copper), connect the fixture’s ground wire to it. Otherwise, connect the fixture’s ground wire directly to the mounting plate (C) using the green screw provided. After the wires are connected, tuck them carefully inside the outlet box.

FINISHING THE INSTALLATION (Fig. 4)

8. Align the fixture body (E) onto screws (A) and secure it with cap nuts (F) and rubber washers (B). (Fig. 1)
9. To prevent moisture from entering the outlet box and causing a shortage, use clear caulking (i.e. Indoor/Outdoor silicone sealant) to outline the outside of fixture back plate where it meets the wall leaving a space at the bottom to allow moisture a means to escape.

Your installation is now complete. Return power and test the fixture.

Fig. 1

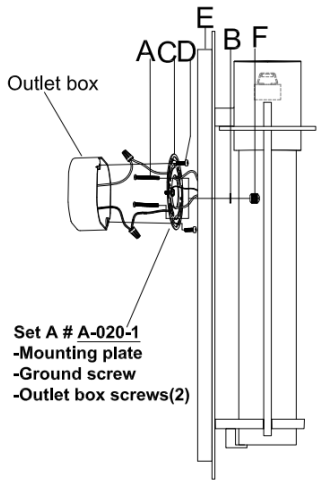

Fig.2

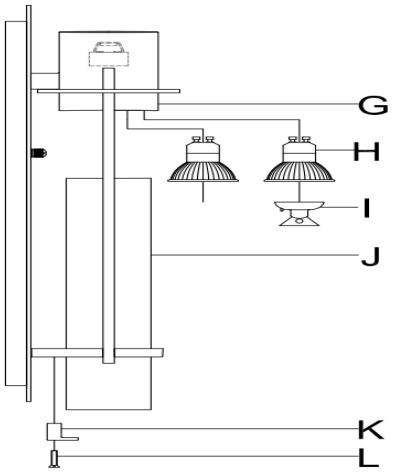

Fig. 3

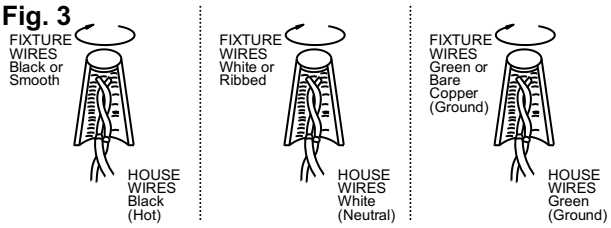

american lighting association

C ETL US LISTED Intertek
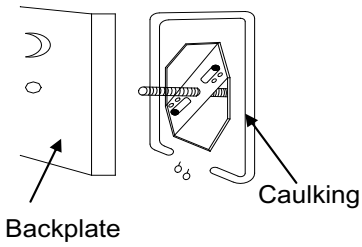
Fig. 4