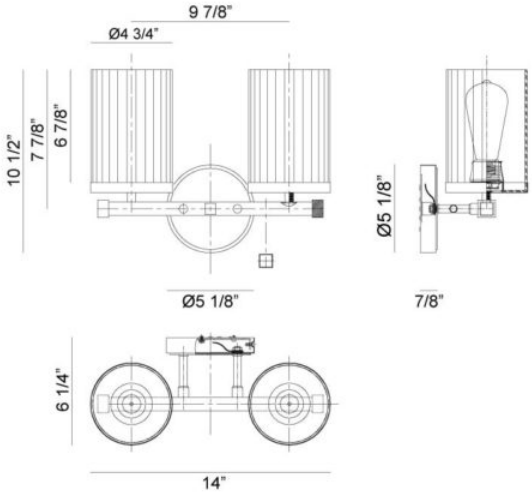

S06102BK

SPECIFICATION SHEET

Finish	Black
Shade	Clear Ribbed Glass
Shade Dimension	Ø4 3/4" x 7 7/8"H
Dimension	14"W x 11 1/2"H x 6 1/4"E
H/CTR	8 7/8"
Lamping	2 x 60W Medium Base-E26 120V
Canopy Size	Ø5 1/8" x 7/8"E
Location	Damp
Warranty	1 year fixture warranty