ASSEMBLING & INSTALLATION INSTRUCTIONS

The drawing shown may not exactly match the product enclosed.
However, the installation instructions do apply to this product.

41085

- **WARNING! SHUT POWER OFF AT FUSE OR CIRCUIT BREAKER.**
- **ATTENTION! COUPER LE COURANT AU FUSIBLE OU UN DISJONCTEUR.**

ASSEMBLING THE FIXTURE (Fig.1)

1. Shut off the power at the circuit breaker box. Remove old fixture and all hardware from Junction Box.
2. Carefully unpack your new fixture and lay out all the parts on a clear area. Take care not to lose any small parts necessary for installation.
3. Slide the electrical wires through the pipe(F)/(E)/(D) and double loop(B), by turn them securely until tight. Raise the canopy(A) to the loop's pipe thread, lock it securely with the lock washer and hex nut.
4. By measuring, determine correct distance hole in mounting plate, then drilled two holes(by measuring distance hole) next to the junction box; raise the plastic anchor insert the hole.
5. Thread the two mounting screws about 1/4" into the pre-drilled holes in the mounting plate, spaced about the same distance apart as the holes in the fixture canopy. Attach the mounting plate to the junction box with two junction box screws and two wood screws, tighten screws securely with screwdriver. The side of the mounting plate marked "GND" must face out. **The junction box is not included.**
6. While holding the fixture body towards the ceiling, connect the electrical wires as Shown in **Fig.2,** making sure that all wire nuts are secured. You may have to wrap the connections with electrical tape. If your outlet has a ground wire (green or bare copper), connect the fixture ground wire to it. Otherwise connect fixture's ground wire directly to the Mounting plate with the green screw provided. After wires are connected, tuck them carefully inside the Junction Box.
7. Raise the fixture body onto the Junction box, aligning the mounting screws with mounting hole in canopy(A) and lock it securely with the finial(C).
8. Install the light bulbs(Not included) in accordance with the fixture's specifications. **NOTE: DO NOT EXCEED THE SPECIFIED WATTAGE!**

Your installation is now complete. Return power to the junction box and test the fixture.

FIG.1

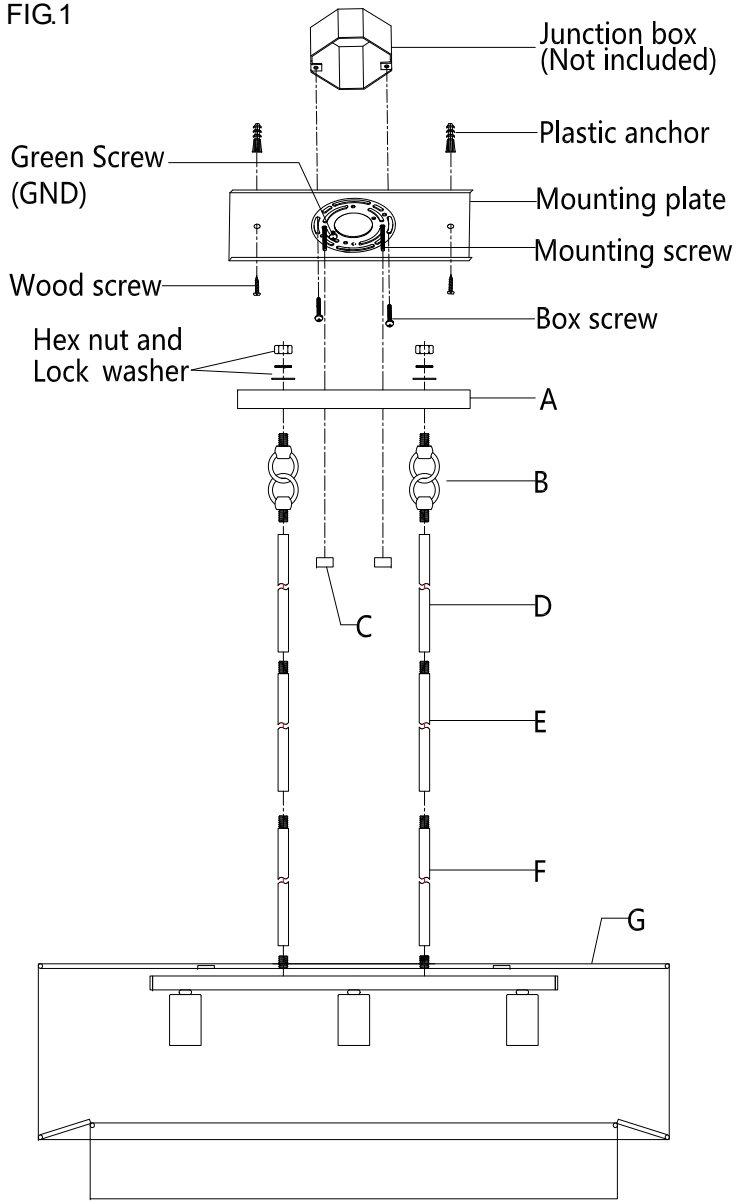

FIG.2

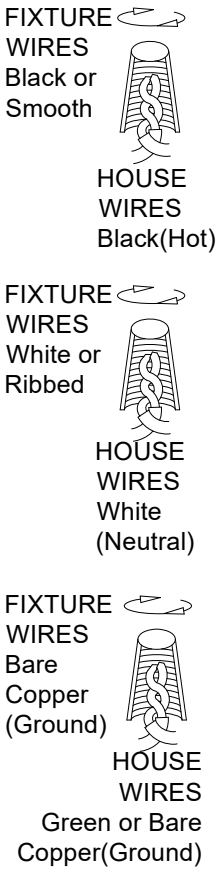

Thank you for purchasing a **LIVEX** product.
Need assistance with parts or assembly? Please call customer service at: **800-761-8056**
Or visit us online at: WWW.LIVEXLIGHTING.COM

©COPYRIGHT ALL RIGHTS RESERVED.**LIVEX** LIGHTING,INC.