LED Vanity Light

VL7524
INSTALLATION SHEET

START FROM HERE

- Make sure **POWER** is **COMPLETELY OFF** at the fuse box
- Have your fixture installed by a qualified licensed electrician
- Prepare everything in a clear area
- Wear gloves at all time during this installation
- Read instructions carefully before you start assembly
- Keep this installation sheet for future reference

Technical Support: 1-855-855-8926

Please Note:

- This Kuzco LED fixture comes with pre-wired LED module(s)
- Unless instructed, Do Not touch any part of the LED module(s) as any unnecessary contact with the module could cause permanent damage
- Use ELV (Electronic Low Voltage) type of dimmer for dimming application
- 120V input

1. Remove fixture from its original package

2. Separate mounting plate **(1c)** from canopy **(2a)** by removing canopy screws **(2b)**

3. Attach mounting plate **(1c)** to electrical junction box **(1a)** using junction box screws provided **(1e)** in hardware package

4. Secure mounting plate **(1c)** to mounting surface with anchors **(1f)** and screws **(1g)**

5. Make proper electrical connections (**black** to **hot** "L", **white** to **neutral** "N", **ground** to **"GND")** with wire nuts **(1b)** provided in hardware package

6. Slide glass **(3a)** onto canopy **(2a)** and secure bracket spring **(4b)** to screw **(4c)** with decorative nut **(4a) (See Illustration 1)**

7. Secure fixture end caps **(3b)** with cap screws **(3c)**

8. Attach canopy **(2a)** to mounting plate **(1c)** with canopy screws **(2b)**

Illustration 1

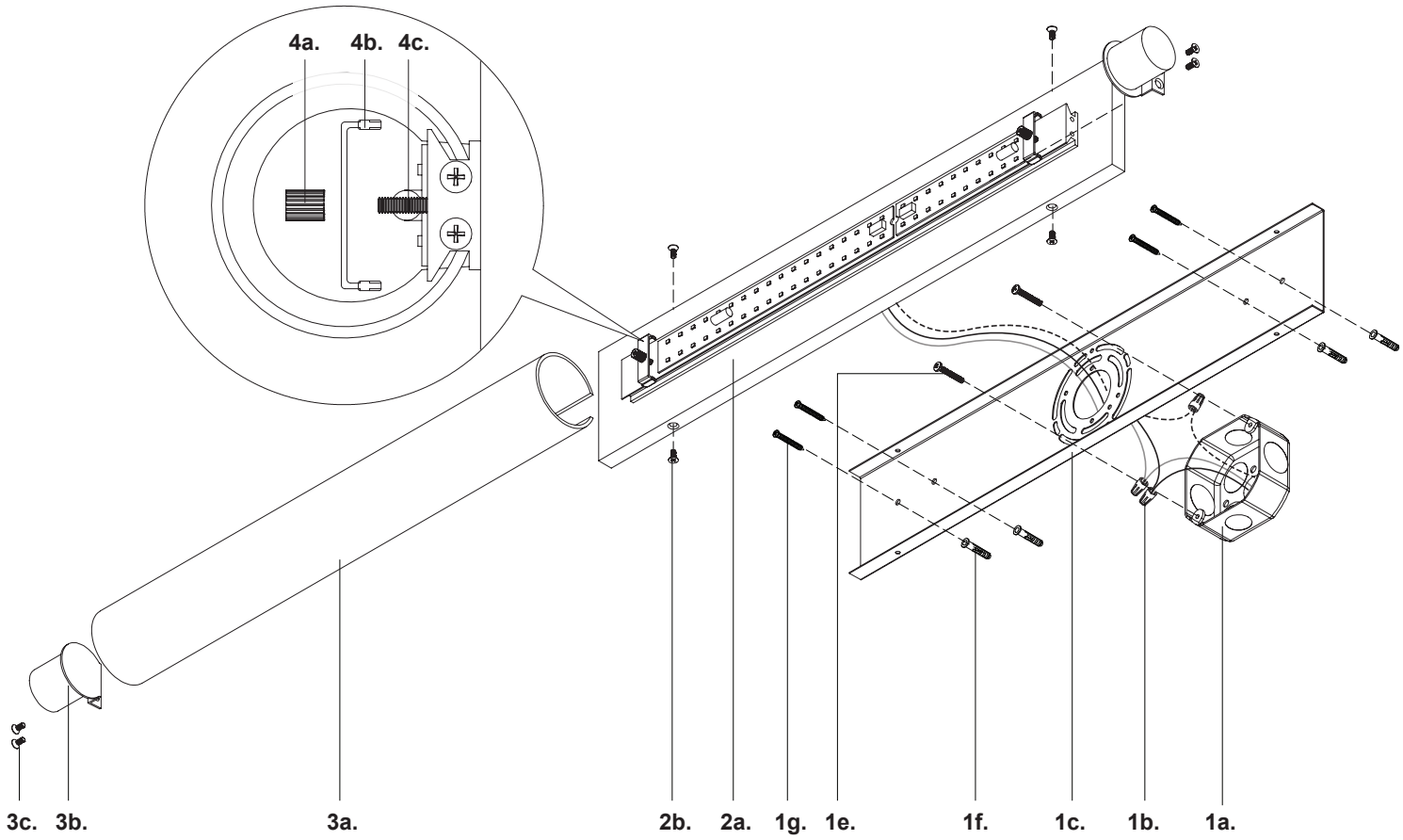

KUZCO
19054 28th Avenue Surrey, BC Canada V3Z 6M3
T: 604 538 7162 TF: 1-855 85 KUZCO F: 604 538 7196
W: kuzcolighting.com
20260101