ASSEMBLY & INSTALLATION INSTRUCTIONS

MODEL: 4636
RODEO DRIVE 6 LIGHT 43 INCH PENDANT

I M A G E

If you have any questions or problems assembling your fixture please call us for assistance.
Customer Service: (702) 361-4345 or (800) 525-2655
customer.services@kalco.com

WARNING! TO REDUCE THE RISK OF FIRE OR INJURY PLEASE TAKE PRECAUTION AND FOLLOW THE STEPS BELOW.

1. If you are unfamiliar with electrical wiring, call a qualified electrician to install this unit. More than one person may be necessary to install fixture, make sure you have enough qualified help.
2. Turn off the power to the fixture's circuit at the service panel. Use a voltage detector to verify that the power is off.
3. DO NOT install bulb which exceeds the maximum wattage specified on the socket label.

Si vous avez des questions ou des problémes assemblage de votre dispositif s'il vous plait appel pour l'assistance.
Customer Service: (702) 361-4345 or (800) 525-2655
customer.services@kalco.com

AVERTISSEMENT! POUR RÉDUIRE LES RISQUES D'INCENDIE OU DE BLESSURES S'IL VOUS PLAÎT PRENDRE DES PRÉCAUTIONS ET SUIVEZ LES ÉTAPES CI-DESSOUS.

1. Si vous n'êtes pas familier avec le câblage électrique, appelez un électricien qualifié pour installer cet appareil. Plus d'une personne peut être nécessaire d'installer appareil, assurez vous que vous disposez de l'aide assez qualifié.
2. Coupez l'alimentation au circuit de l'appareil sur le tableau de service. Utiliser un détecteur de tension pour vérifier que l'alimentation est coupée
3. NE PAS installer l'ampoule qui excède la puissance maximale indiquée sur l'étiquette du socket.

W I R I N G D I A G R A M

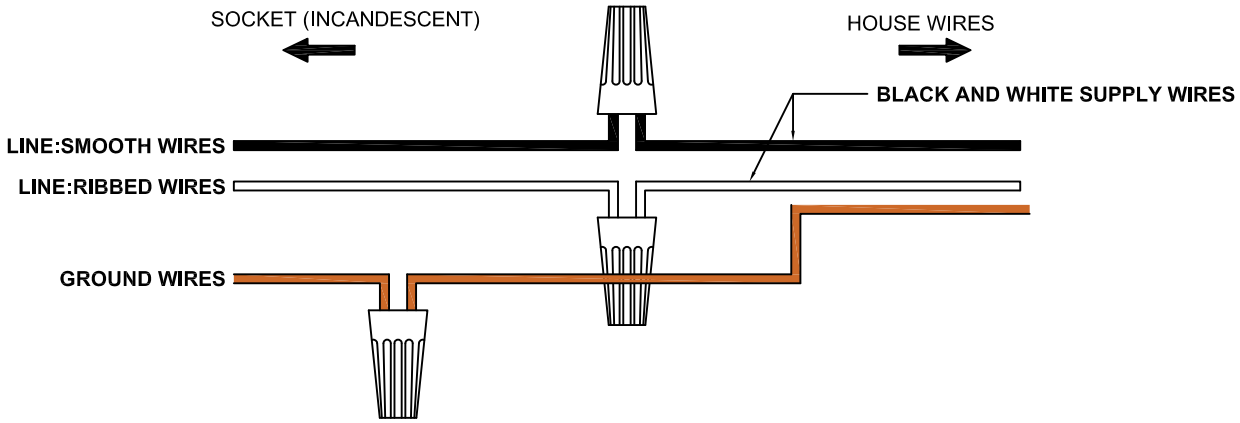

ASSEMBLY & INSTALLATION INSTRUCTIONS

MODEL: 4636
RODEO DRIVE 6 LIGHT 43 INCH PENDANT

KNOCK DOWN ASSEMBLY

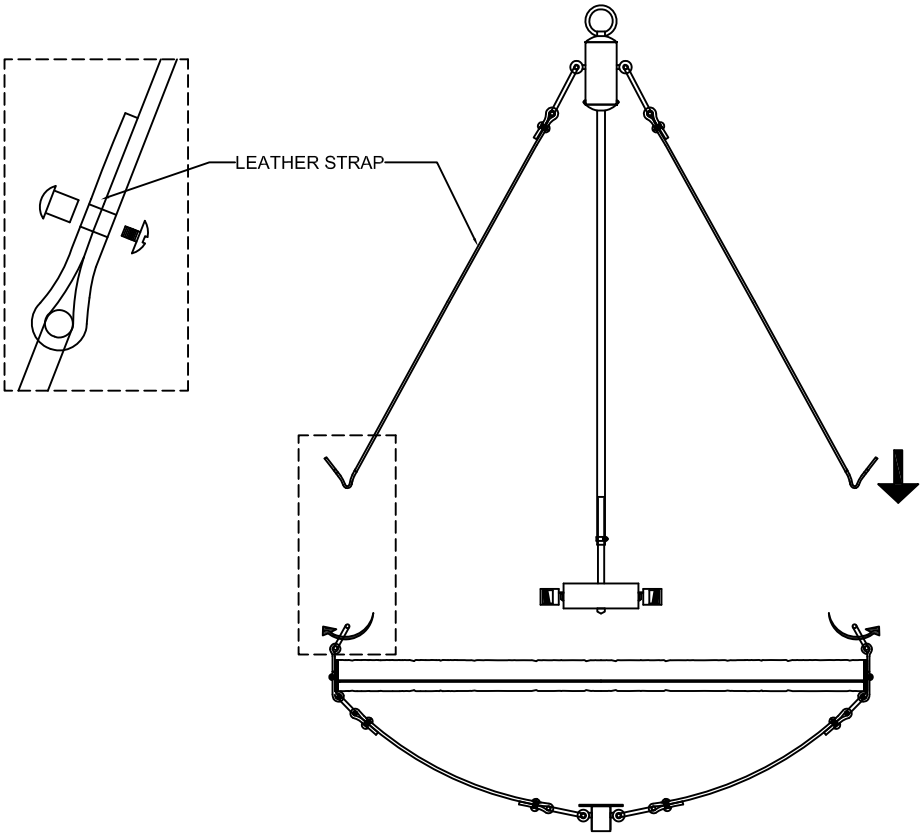

STEP 1: Attach the leather strap in the loop and secure with connecting screws as shown.

ASSEMBLY & INSTALLATION INSTRUCTIONS

MODEL: 4636
RODEO DRIVE 6 LIGHT 43 INCH PENDANT

CEILING BRACE OPTIONS

" METHOD A "

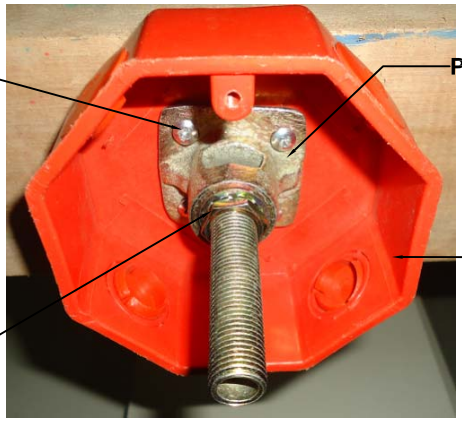

Brace is directly on top of the outlet box and not accessible).

Using a 1/8" drill bit, pre-drill (4) holes into the wood brace through the (4) hole pattern in the outlet box. (Outlet box is shown as a cutaway for Clarity). Secure the hickey to the brace with (4) #8 x 1-1/2" screws. The wire way opening should mount as shown, between the outlet box and 2 mounting flanges.

" METHOD B "

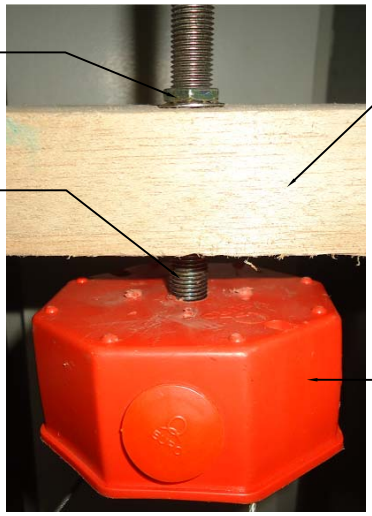

(Brace is above and not in contact with the outlet box and is accessible)

Remove center knockout from outlet box. In line with the center knockout, drill a 9/16" hole in the brace. (Brace should be fastened to the ceiling joist after pipe is installed). Assemble hickey to one end of a ¼ pipe nipple. The pipe should be flush with inside of the hickey wire way. Insert pipe through back of outlet box and through the brace above. Secure pipe with a ¼ pipe nut.

ASSEMBLY & INSTALLATION INSTRUCTIONS

MODEL: 4636
RODEO DRIVE 6 LIGHT 43 INCH PENDANT

ELECTRICAL / MOUNTING ASSEMBLY

STEP 2: Assemble nipple and collar loop to cast hickey.

STEP 3: Determine fixture height. Make adjustment if needed. Attach chain to fixture loop and collar loop using open-able chain.

STEP 4: Pass the collar loop ring and canopy, over the chain.

STEP 5: Lace the wires through the chain (every other link) pull ends of wire through center hole of collar loop and out the openings of the cast hickey.

STEP 6: Install safety cable to ceiling beam.Make sure ceiling beam is strong enough to support 4 times the weight of the fixture.

STEP 7: Refer to wiring diagram. With wire carefully threaded thru canopy, connect the black supply wire to the smooth fixture wire with wire connector, connect the white supply wire to the ribbed fixture wire with wire connector. Connect ground wire from fixture with supply ground wire.

STEP 8: Carefully tuck in all wires and raise the canopy to the outlet box.

STEP 9: Secure canopy with collar loop ring.

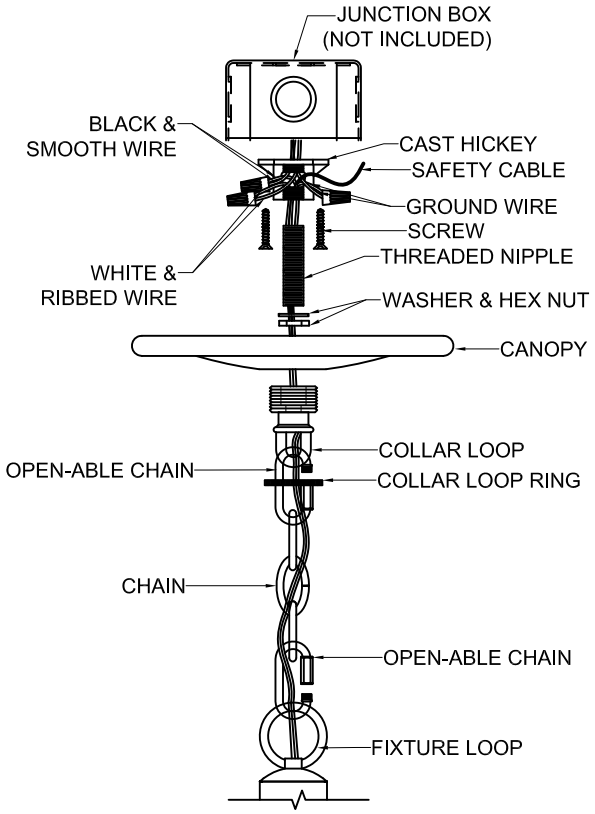

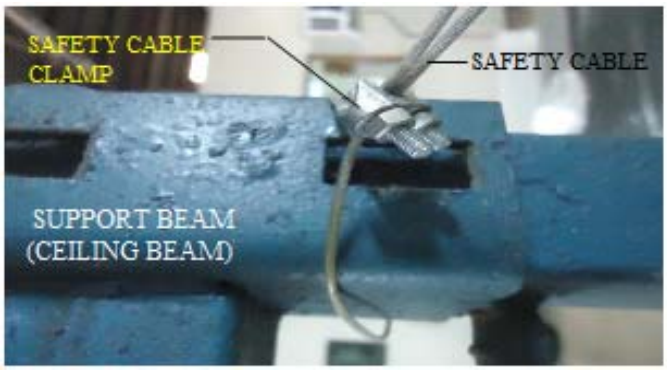

ASSEMBLY & INSTALLATION INSTRUCTIONS

MODEL: 4636
RODEO DRIVE 6 LIGHT 43 INCH PENDANT

FRAME/COMPONENTS ASSEMBLY

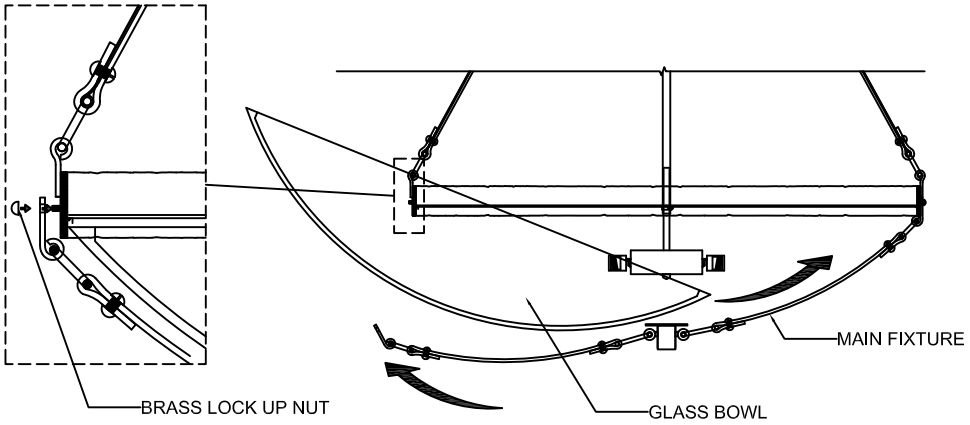

STEP 10: Slide-in the glass bowl to the main fixture as shown, lock in place using the brass nut provided.

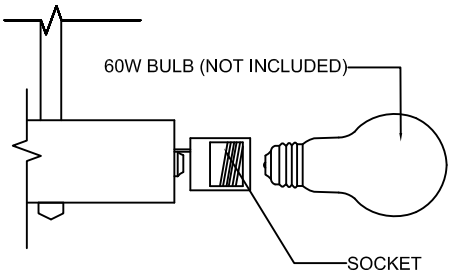

STEP 11: Install bulbs to socket as shown. Do not use bulbs that exceed 100 Watts.

FOR LIGHTING MAINTENANCE:

- **Regular cleaning of fixture with proper and gentle care using a soft duster, soft lint-free or damp cloth is recommended.**
- **Refrain from using harsh cleaning liquids that may cause chemical reaction on the hand painted finishes.**
- **Always refer to the Assembly Instruction before removing any components.**
- **HANDLE WITH CARE.**

ASSEMBLY & INSTALLATION INSTRUCTIONS

MODEL: 4636
RODEO DRIVE 6 LIGHT 43 INCH PENDANT

PARTS LIST

IMAGE	PARTS NAME	QTY .
	X-14 Parts Bag	1 PC
	Screw	4 PCs
	Threaded Nipple (Short)	1 PC
	Star Washer	2 PCs
	Hex Nut	2 PCs
	Threaded Nipple (Long)	1 PC
	Open-able Chain	2PCs
	Canopy	1PC
	Chain 8ft.	1PC