INNOVATIONS LIGHTING
CREATIVITY MEETS EVOLUTIONARY DESIGN©

DESIGN COPYRIGHT - 04/09/2024
ALL RIGHTS RESERVED AND MAY NOT BE DUPLICATED WITHOUT OUR WRITTEN PERMISSION

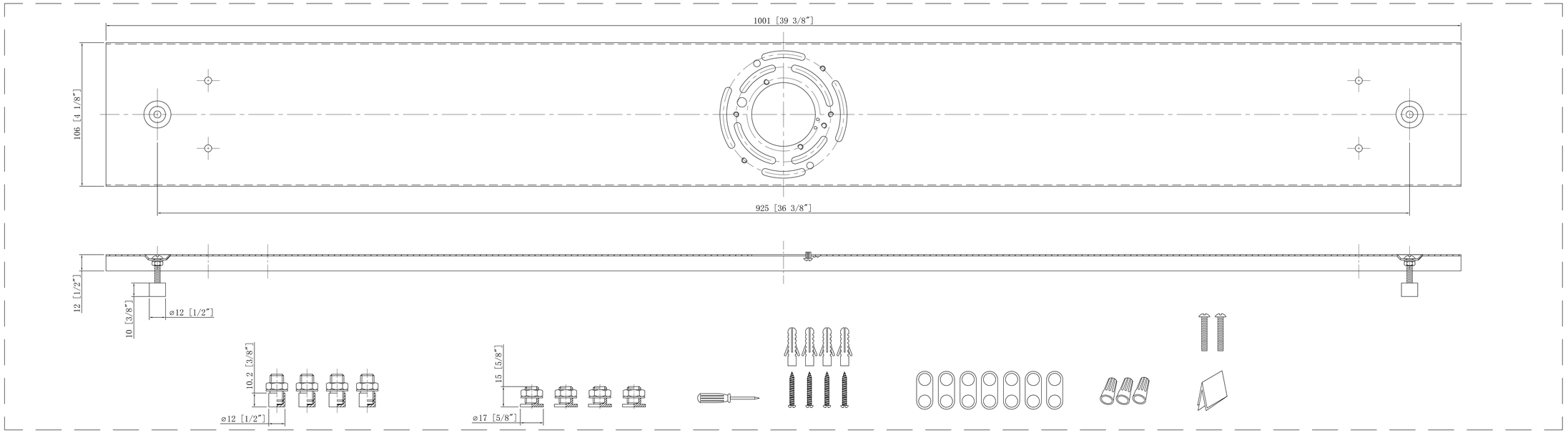

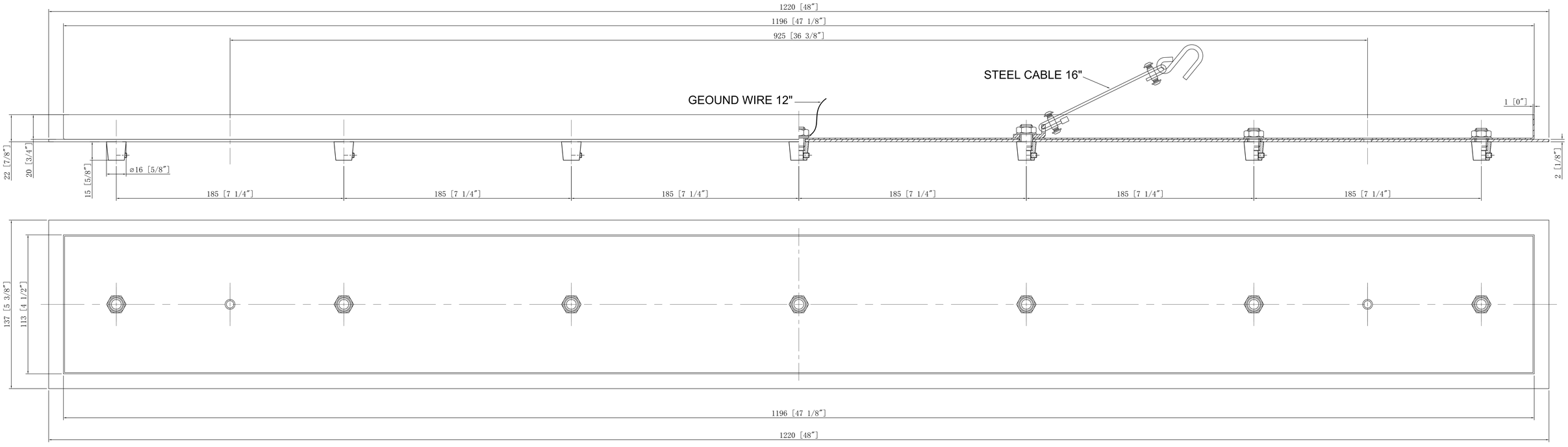

ITEM: 124/127