CRYSTORAMA LIGHTING

Crystorama.com

ASSEMBLY INSTRUCTION MODEL # 534-MT

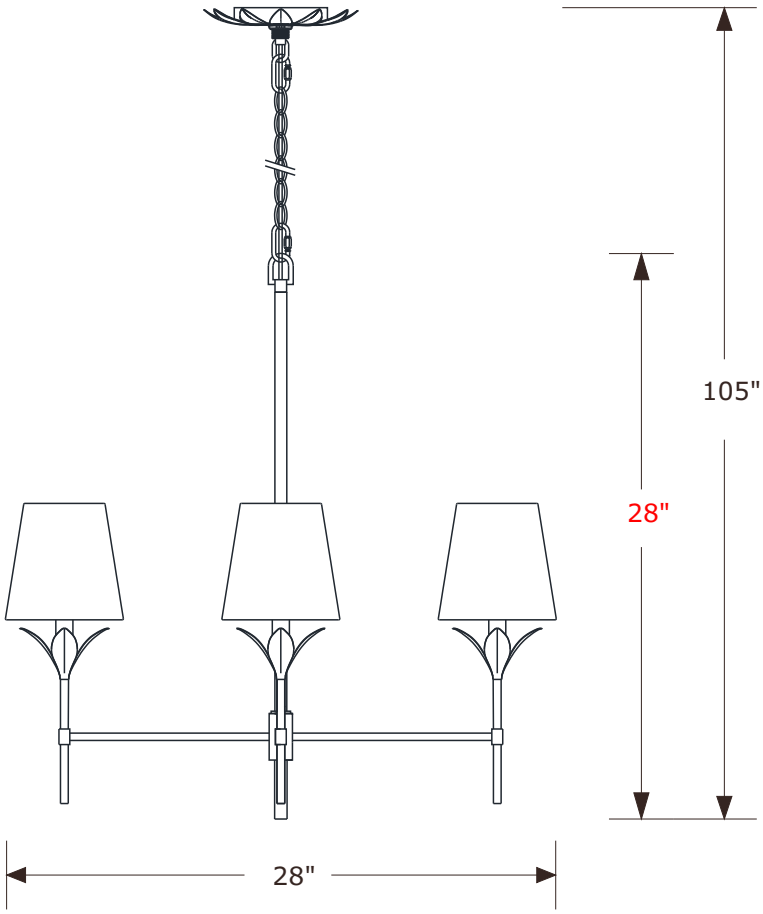

WARNING:

All electrical components must be installed by a licensed electrician in accordance with the National Electric Code and the appropriate local electrical codes.

You will need 4 -Candelabra Bulb
40 Watts Recommended 60 Watts Max.
USE LED BULBS FOR EXTENDED USE
THIS FIXTURE IS DRY RATED

How to Install

1. Screw the top stem onto the the top of the frame.
2. Screw the bottom stem onto the bottom of the frame.
3. Decide the preferred hanging height and choose the correct length of chain needed.
4. Raise the fixture up to the ceiling and do the wire connections.

The minimum hanging height:

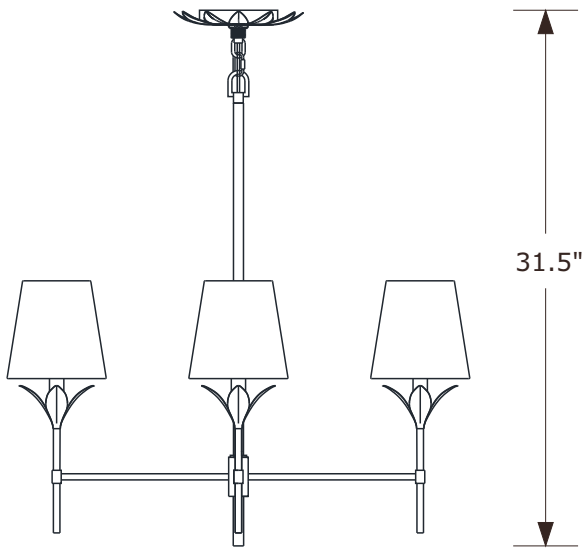

⚠ **WARNING:** This product can expose you to Lead, which is known to the State of California to cause cancer and/or birth defects or reproductive harm. For more information go to www.P65Warnings.ca.gov.

CRYSTORAMA LIGHTING

Crystorama.com

PART NUMBER MODEL # 534-MT

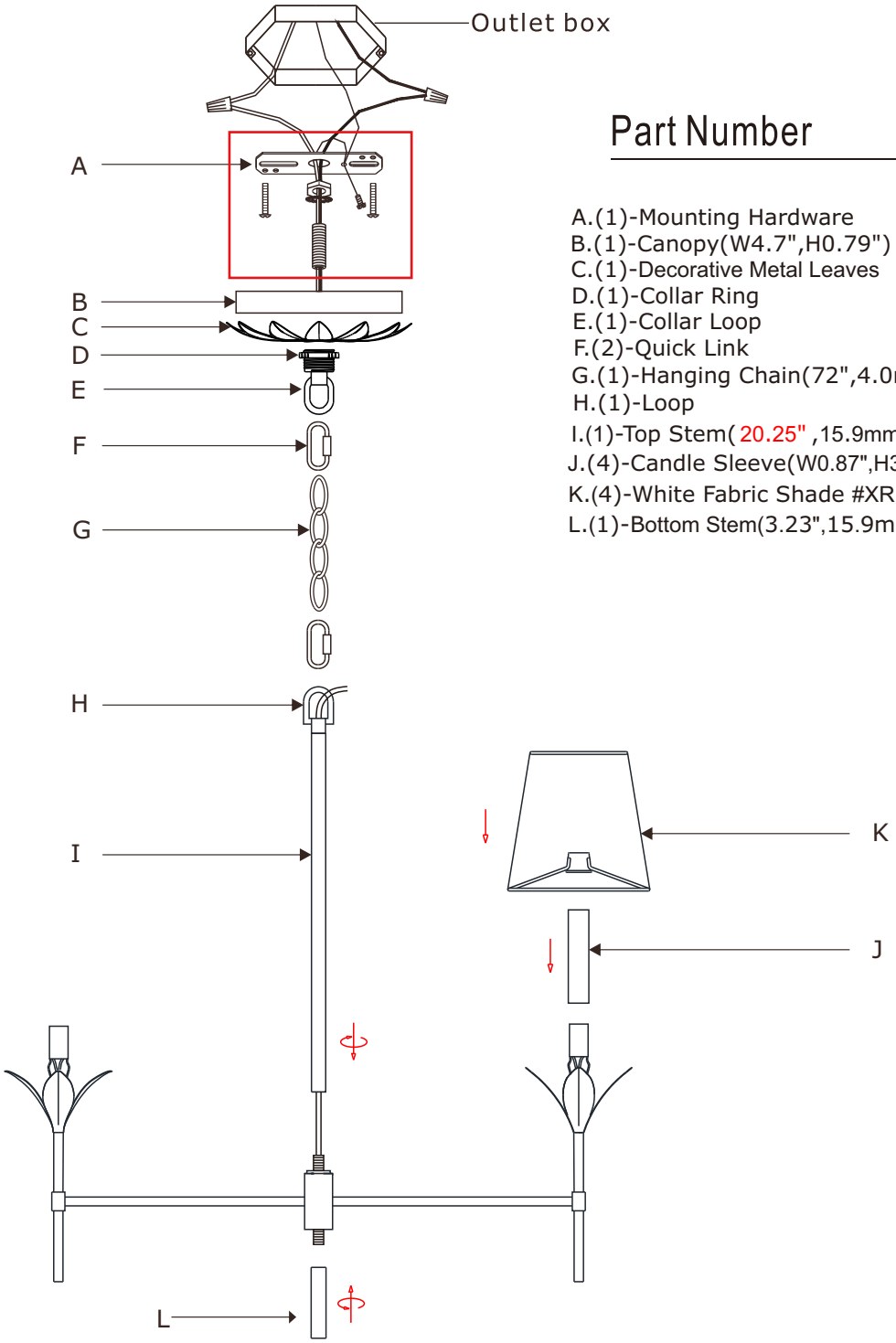

Part Number

A.(1)-Mounting Hardware
B.(1)-Canopy(W4.7",H0.79") #XRE514MTCAN4.7IN
C.(1)-Decorative Metal Leaves
D.(1)-Collar Ring
E.(1)-Collar Loop
F.(2)-Quick Link
G.(1)-Hanging Chain(72",4.0mm) #XRE504MTCHA4MM
H.(1)-Loop
I.(1)-Top Stem(20.25" ,15.9mm) #XRE534 MTSTEM20.25 IN
J.(4)-Candle Sleeve(W0.87",H3.9") #XRE516MTCDL3.94IN
K.(4)-White Fabric Shade #XRE531SHA6IN
L.(1)-Bottom Stem(3.23",15.9mm) #XRE534MTSTEM3.23IN