CRAFTMADE

Orlon# 50729-FB & PAB

PLEASE READ AND SAVE FOR FUTURE REFERENCE.

CAUTION

1. Turn off the main power at the circuit breaker before installing the fixture in order to prevent possible shock.
2. All electrical connections must be in accordance with local and National Electrical Code (N.E.C.) standards. If you are unfamiliar with proper electrical wiring connections, obtain the services of a qualified electrician.

GENERAL

Remove all parts and hardware from the box and make sure that none are missing by referencing the illustrations provided.

Bulb Required (not included): 9 Madium-base 60 Watt Max.

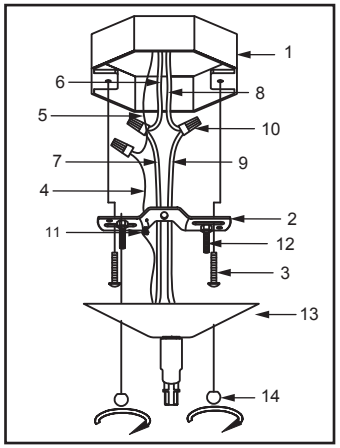

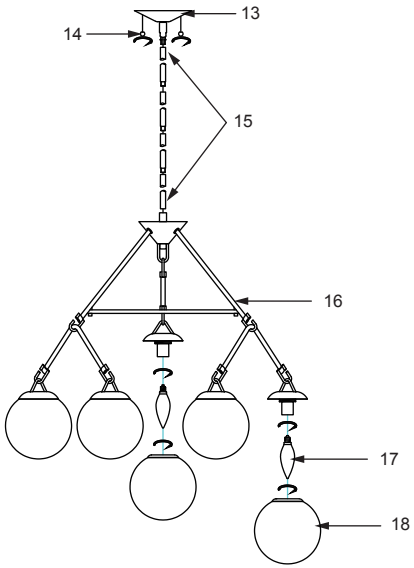

9-LIGHT CHANDELIER

1. OUTLET BOX (NOT INCLUDED)
2. MOUNTING STRAP
3. OUTLET BOX SCREW and WASHER (pre-attached to outlet box)
4. FIXTURE GROUND WIRE
5. SUPPLY GROUND WIRE (not included)
6. BLACK SUPPLY WIRE (not included)
7. BLACK FIXTURE LEAD WIRE
8. WHITE SUPPLY WIRE (not included)
9. WHITE FIXTURE LEAD WIRE
10. WIRE CONNECTOR
11. GROUND SCREW (pre-attached)
12. FIXTURE SCREW and HEX NUT (pre-attached)
13. CANOPY
14. DECORATIVE NUT
15. RODS
16. FIXTURE
17. BLUBS
18. GLASS SHADE

Customer Service: 1 (800) 486-4892

Craftmade Limited Warranty

Craftmade warrants all its Products to be free from defects in material and workmanship, subject to certain conditions and exclusions, for period of one year from the date the Product was shipped to the original end use purchaser. LED product is warranted for a period of 3 years from the date purchased or shipped to the original end use purchaser. Craftmade will warrant its product only if it is sold through an authorized Craftmade dealer.

Craftmade will, at its discretion, repair, replace or make appropriate adjustment where inspection discloses any defects occurring in normal usage within the applicable time period above, subject to the following conditions and exclusions.

The following costs, expenses and damages are not covered by the provisions of this limited warranty: (1.) labor costs including, but not limited to, costs associated with the removal and reinstallation of Product; (2.) shipping and freight expenses required to return Product to Craftmade.

Al warranties only apply to the original end use purchaser and original installation of Products. **This warranty is not transferable.**

The provisions of this warranty to not apply to products that are used in commercial applications; used for purposes for which they are not designed or intended; which have been subjected to alteration, accidental damage, abuse, misuse, negligence or accident; which have been improperly stored, installed, maintained or operated; which have been used in violation of written instructions provided by Craftmade ; which have been subjected to improper temperature, humidity or other environmental conditions; or which, based on examination by Craftmade , do not disclose to the satisfaction of Craftmade non-conformance to the warranty. Additionally, this warranty **DOES NOT COVER** scratches, abrasions, or deterioration due to the use of paints, solvents, chemicals or abrasive cleaning techniques.

The above warranties also do not apply if:

The original bill of sale, delivery date, or product number cannot be verified.

The parts claimed to be defective are not returned for inspection if so requested by Craftmade.

The product is not in the possession of the original end use purchaser at the time warranty claim is made.

To obtain Warranty Service, please contact Craftmade through your Lighting Dealer, Lighting Contractor, or by writing Craftmade , Attn: Customer Service Department, 650 South Royal Lane, Coppell, TX 75019, or by calling 800.486.4892

Warranty Exclusions:

We use the best weather resistant finishes, nevertheless finishes for fixtures installed outdoors are subject to change due to prolonged exposure to sunlight, pollutants and other environmental conditions. Any claim for fading, discoloration or "patina" of a finish on an outdoor fixture is not applicable to the above warranty. See the "Finish Care & Cleaning" instructions below for proper care and maintenance of your fixture.

The environment within ten miles of a sea coast can be extremely corrosive. Even with the appropriate maintenance, products installed in this environment will typically deteriorate more than products installed in a less severe environment. Some corrosion and/or deterioration is considered "normal wear" in this environment. Any claim for finish failures or for corrosion of other components due to coastal environment conditions is not applicable to the above warranty.

We cannot warranty our Direct Burial Poles due to environmental issues such as moisture, soil acidity and other corrosive soil and air conditions.

At Craftmade we try our best to assure that glass and metal finishes shown in our catalogs match the actual product, but chemical finish variations and hand applied finishes can result in differences between the actual product and printed images.

Craftmade does not authorize any person to create for it any obligation or liability in connection with its Products. The maximum liability is limited to the original purchase price of the product. No action arising out of any claimed breach of this warranty by Craftmade may be brought by the Original User more than one (1) year after the cause of action has arisen.

IMPLIED WARRANTIES INCLUDING THAT OF MERCHANTABILITY AND FITNESS FOR A PARTICULAR PURPOSE ARE EXPRESSLY LIMITED TO THE DURATION OF THIS WARRANTY. CRAFTMADE AND/OR SELLER DISCLAIMS ANY LIABILITY FOR SPECIAL, INCIDENTAL OR CONSEQUENTIAL DAMAGES.

This warranty gives you specific legal rights, and you may also have other rights which vary from state to state. Some states do not allow limitations on incidental or consequential damages or how long an implied warranty lasts, so that the above limitations may not fully apply to you. Refer to your local laws for your specific rights under this warranty.

CARE & CLEANING: Initial care for finishes requires periodic cleaning with a soft cloth, dampened with water. A mild non-abrasive soap may be used along with a soft cloth and water if the fixture is very dirty. Particular care should be taken to avoid abrasive materials and strong cleaning agents as they will quickly destroy the protective coatings and subject the finish to oxidation and discoloration.