ITEM NAME /NOM D' ITEM:LEMON DROP BAR TABLE

ITEM # /NO. ITEM:601101

Enquiry:parts@zuomod.com

PART LIST/Liste des pièces

(1)	(2)	(3)	(4)
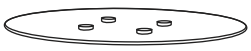 X1	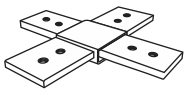 X1	X4	1. X8 8X12mm 2. X4 10X20mm 3. X4 4. X1 6mm 5. X1 5mm

INSTRUCTION

A

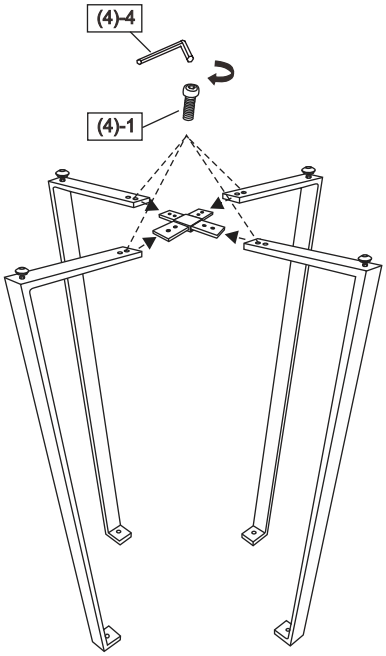
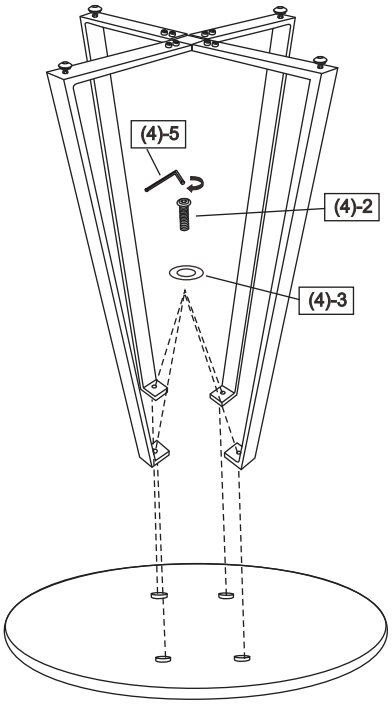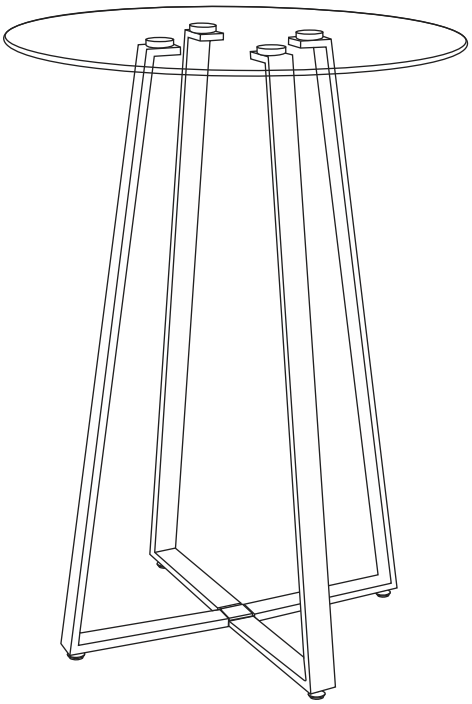
B