SPEC SHEET

Grenol Medium Modern Bamboo Chandelier
Item # S 5161HAB-PL

Designer: Studio VC

Height: 31.75"
Width: 33.25"
Canopy: 5" Round
Finishes: BZ, HAB, PN
Shade Treatments: PL
Shade Details: 4" x 5" x 6.75"
Socket: 6 - E12 Candelabra
Wattage: 6 - 40 B

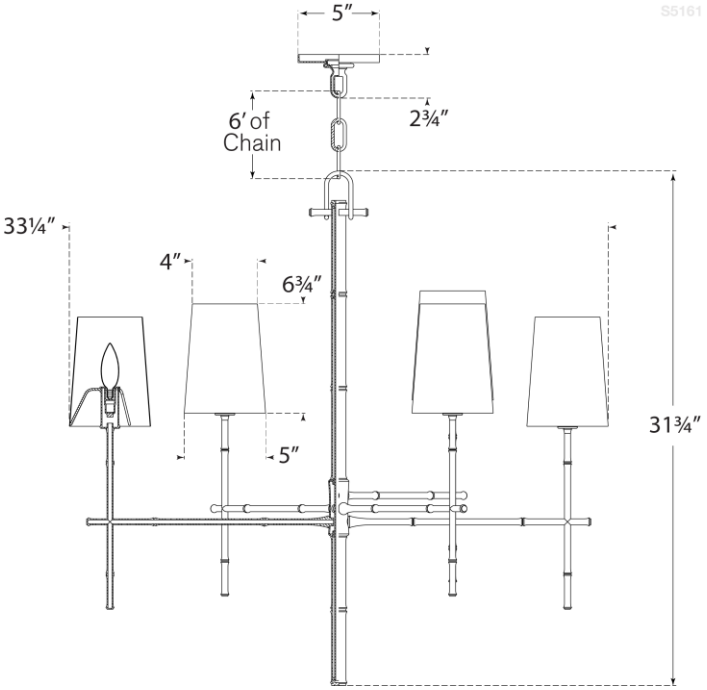

VISUAL COMFORT