SPEC SHEET

Bistro Medium Chandelier

Item # S 5022HAB-WG

Designer: Ian K. Fowler

O/A Height: 58.25"
Fixture Height: 29"
Min. Custom Height: 38"
Width: 47"
Canopy: 4.5" Round
Finishes: HAB, PN
Glass Options: CG, WG
Socket: 12 - E12 Candelabra
Wattage: 12 - 40 B
Note: Custom Height Available

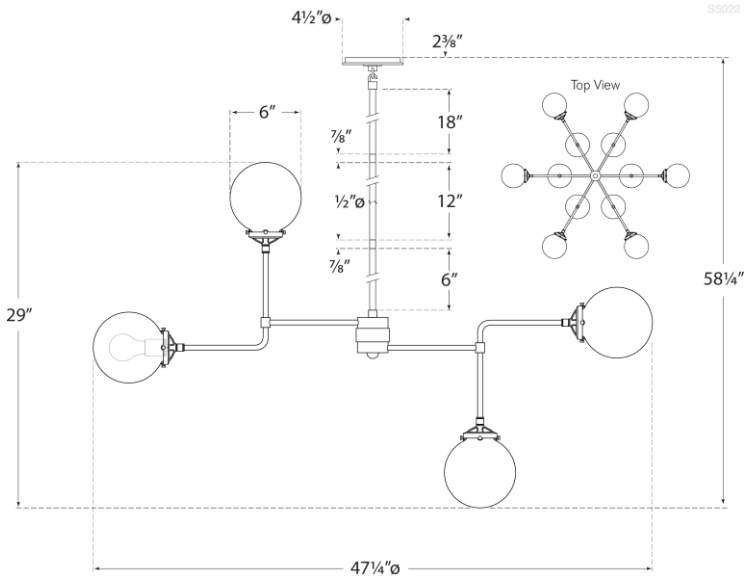

VISUAL COMFORT