INSTALLATION INSTRUCTIONS

Item#N7755-143 (New. 05/19/2021)

READ AND SAVE THESE INSTRUCTIONS

WARNING! SHUT POWER OFF AT FUSE OR CIRCUIT BREAKER.

AVERTISSEMENT! COUPER LE COURANT AU NIVEAU DES FUSIBLES OU DU DISJONCTEUR.

HANGING THE FIXTURE (Fig. 1)

1. Shut off power at the fuse box or circuit breaker box and remove the old fixture including the mounting hardware.
2. Carefully unpack your new fixture and lay out all the parts in a clear area. Take care not to misplace any small parts necessary for installation.
3. Loosening screws (L) to remove cloth shade (V) from metal frame (N).
4. First remove plastic tape from cloth shade (V). Then place acrylic sheet (Q) into the bottom of cloth shade (V).
5. Install (4) four medium base bulbs (W) up to 60 watts each or CFL or LED equivalent (not included) in accordance with the fixture specification—**DO NOT EXCEED THE MAXIMUM WATTAGE RATING! (NE PAS DEPASSER LA PUISSANCE NOMINALE MAXIMALE!).**
6. Place cloth shade (V) into metal frame (N) and secure with screws (L).

COMPLETING THE INSTALLATION (Fig. 1)

7. Lock metal frame (N) and metal frame (J) together with screws (I).
8. Loosen hex nuts (D) on canopy (H) by wrench (J) (not included), take apart metal washer (E), lock washer (F), canopy (H), metal plate (S) and swivels (G).
9. Determine the desired hanging height and thread rods (F1, F2 and F3) to all thread (M). Carefully pass the wires through each rod during assembly. Secure swivels (G) onto rods (F1).
10. Align metal plate (S), canopy (H) followed by lock washer (F) and metal washer (E) onto swivels (G) and secure with hex nuts (D) using wrench (J) (not included).
11. Position mounting plate (A) on ceiling and mark location of the two drywall anchors (K). Pre-drill the holes for drywall anchors (K). Then insert drywall anchors (K) into the ceiling.

CONNECTING THE WIRES (Fig. 2)

12. Thread screws (Z) into pre-drilled holes in mounting plate (A). Space the same distance apart as the holes in the canopy (H) and secure with hex nut (Y).
13. Attach mounting plate (A) to outlet box (not included) using mounting screws (B) (Size: #8-32N*L0.5") and wood screws (P) into drywall anchors (K). The side of the mounting plate marked "GND" must face out.
14. The support cable is provided to support the weight of the fixture while wiring. Align the fixture to mounting plate (A) and attach hook (T) on the end of support cable (R) into a slot located on mounting plate (A). Carefully allow the support cable (R) to support the weight of the fixture while wiring.

CONNECTING THE WIRES (Fig. 1, Fig. 2)

15. At this point, connect the electrical wires as shown in Fig. 2, making sure that all wire connectors are secured. If your junction box has a ground wire (green or bare copper), connect the fixture's ground wire to it. Otherwise, connect the fixture's ground wire directly to the mounting plate using the green screw provided.
16. Tuck wire connectors neatly inside junction box.
17. Place canopy (H) onto screws (Z) and secure with Knobs (C).

Your installation is now complete. Return power to the junction box and test the fixture.

Note: Illustration (Fig.1) on this manual is for installation purposes only. It may or may not be identical to the fixture purchased.

Fig. 1

Set# A-021-420140
-Mounting plate
-Ground screw
-Mounting Screw*2

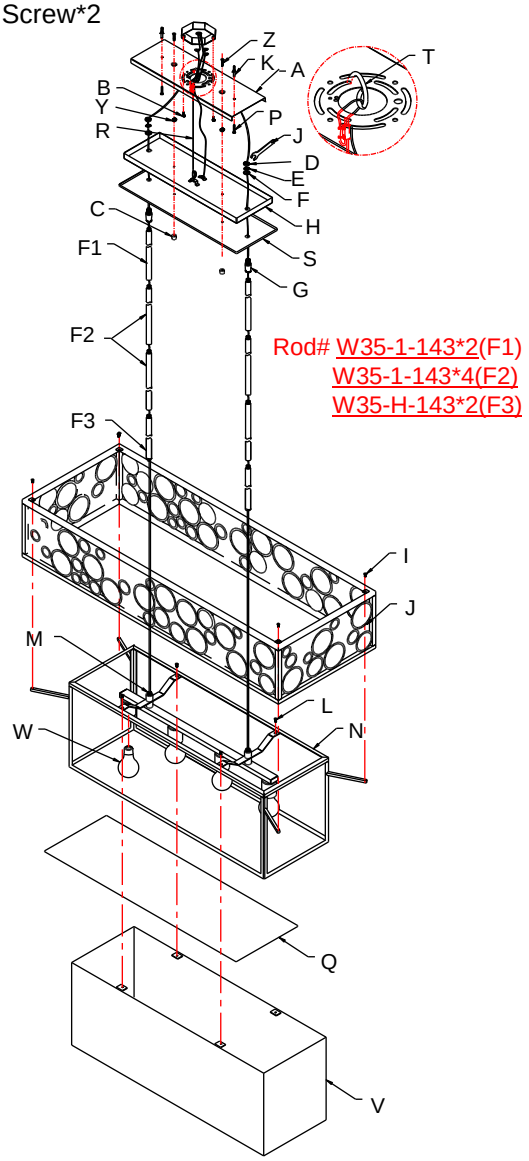

Fig. 2

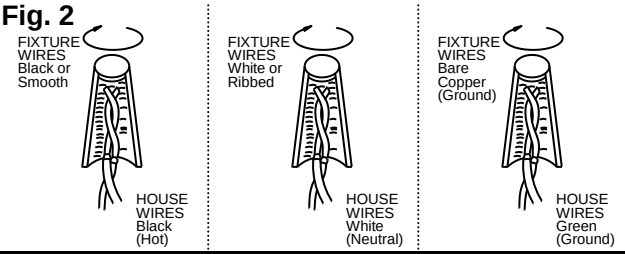

Intertek

american lighting association

LA-3415E