Provident | 10037OI

Job Name:_____ Job Type:_____ Quantity:_____ Comments:_____

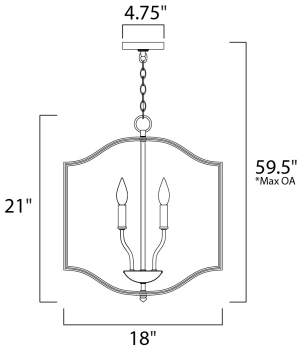

*max overall height

Measurements:

Height	Width	Length
21.00''	18.00''	18.00''
Max OAH	Min OAH	
59.50''	21.75''	
Hanging Weight	Canopy Width	Canopy Length
6.75 lb	4.75''	4.75''

Lamping:

Incandescent CA

5.00 60W CA

300 total watt

Dimmable : Standard

3,000 Rated Lumens

Color Temperature

Shipping:

Carton Weight	Carton Width	Carton Height	Carton Length
10.25 lb	20.50''	8.00''	23.50''
Master Pack Qty	UPC	UPS	
1.0000	783209193871	Yes	

Finish:

Oil Rubbed Bronze OI

Material:

Steel

Certification:

Dry Location

Additional:

CA (Not Included)
Adjustable

MAXIM LIGHTING

253 NORTH VINELAND AVE. | CITY OF INDUSTRY, CA 91746
T. 626.956.4200 | F. 626.956.4225

maximlighting.com
#Maximlighting

Always consult a qualified, licensed electrician before installation of any products....