Bongo | 10015WLSN

Job Name:_____ Job Type:_____ Quantity:_____ Comments:_____

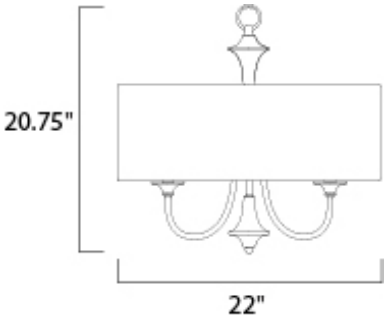

Measurements:

Height	Width	Length
20.75''	22.00''	22.00''
Max OAH	Min OAH	
56.75''	20.75''	
Hanging Weight		
7.23 lb		

Lamping:

Incandescent CA Incandescent	0 Rated Lumens
5.00 60W CA Incandescent	Color Temperature
300 total watt	
Dimmable : Standard	

Shipping:

Carton Weight	Carton Width	Carton Height	Carton Length
15.54 lb	24.50''	16.00''	24.50''
Master Pack Qty	UPC	UPS	
1.0000	783209173613	Yes	

Finish:

Satin Nickel SN

Material:

Steel

Certification:

Dry Location

Additional:

CA Incandescent (Not Included)
Adjustable

MAXIM LIGHTING

253 NORTH VINELAND AVE. | CITY OF INDUSTRY, CA 91746
T. 626.956.4200 | F. 626.956.4225

maximlighting.com
#Maximlighting

Always consult a qualified, licensed electrician before installation of any products....