ASSEMBLING & INSTALLATION INSTRUCTIONS PRODUCT# 51848

WARNING! SHUT POWER OFF AT FUSE OR CIRCUIT BREAKER.
AVERTISSEMENT! COUPER LE COURANT AU NIVEAU DES FUSIBLES OU DU DISJONCTEUR.

ASSEMBLING THE FIXTURE (Fig.2)

1. Shut off the power at the fuse box or circuit breaker. If necessary, remove the old fixture, including the mounting hardware.
2. Carefully unpack the new fixture and lay all the parts on a clear area. Take care not to lose any parts necessary for installation.
3. Attach the loop (I) to the column (J) by turning it clockwise until tight. Attach the long rod (N) to the column (J) and the fixture body (M) by turning it clockwise until tight.
4. Attach the short rod (O) to the fixture body (M) by turning it anticlockwise until tight. Attach the column (P) to the short rod (O) , aligning the hole with pipe nipple and screw it with nut (Q).

HANGING THE FIXTURE (Fig.1)

5. Thread the nipple (C) into the loop (F) until snug.
6. Thread the other end of the nipple (C) with the loop attached into the crossbar (D) until snug.
7. Place the lock washer (B) over end of the nipple (C) protruding through the crossbar and thread the hex nut (A) onto the nipple until tight.
8. Take the crossbar assembly and mount to ceiling junction box with the junction box screws (E). Tighten the screws securely with a screwdriver.
9. Use proper chain pliers to open one end link of the chain and connect it to the fixture loop (I); then close the link.
10. By measuring, determine correct number of links needed for proper hanging height. Using proper chain pliers to disconnect and discard remaining chain.
11. Lace the fixture wires through the chain.
12. Slip loop collar (H) and the canopy (G) over the chain.
13. Open the other end link of the chain and hang the fixture on the loop at the ceiling. Close the link.
14. Feed the fixture wires through the loop (F) and nipple (C) and pull until tight.

CONNECTING THE WIRES (Fig.3)

15. Connect the electrical wire as shown in figure 3, making sure that all wire connectors are secured. If your outlet has a ground wire (green or bare copper), connect the fixtures ground wire to it. If the junction box has no ground wire, attach the bare copper fixture wire to the green ground screw on the crossbar. Tuck the wire connections neatly into the ceiling junction box.

COMPLETING THE INSTALLATION (Fig.1 and Fig.2)

16. Raise the canopy (G) all the way to the ceiling; then raise the loop collar (H) and thread into ceiling loop protruding through canopy.
17. Hook the end of long crystals (U) to the bottom loop of the column (J) and the top hole of the fixture body (M).
18. Hook the end of short crystals (T) to the bottom hole of the fixture body (M) and the top hole of the column (P).
19. Hang the crystals (R) to the top hole of the column (J) and to the bottom hole of the column (P). Hang the crystals (S) to the middle hole of the column (P).
20. Place the crystal cup (K) and the tube (L) over the socket of the fixture body (M).
21. Install the light bulbs (not included) in accordance with the fixture's specifications: **DO NOT EXCEED THE MAXIMUM WATTAGE RATING! (NE PAS DEPASSER LA PUISSANCE NOMINALE MAXIMALE!)**

Your installation is now complete. Return power to the junction box and test the fixture.

Fig.1

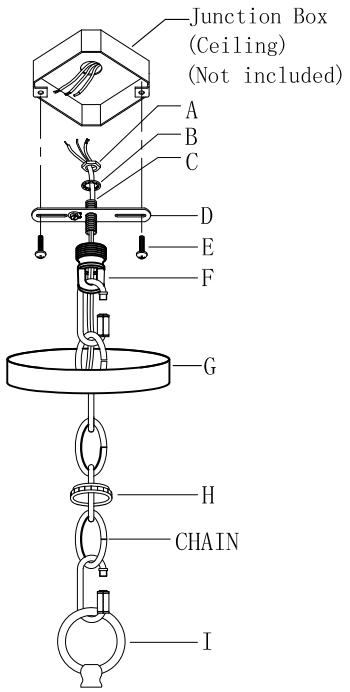

Fig.2

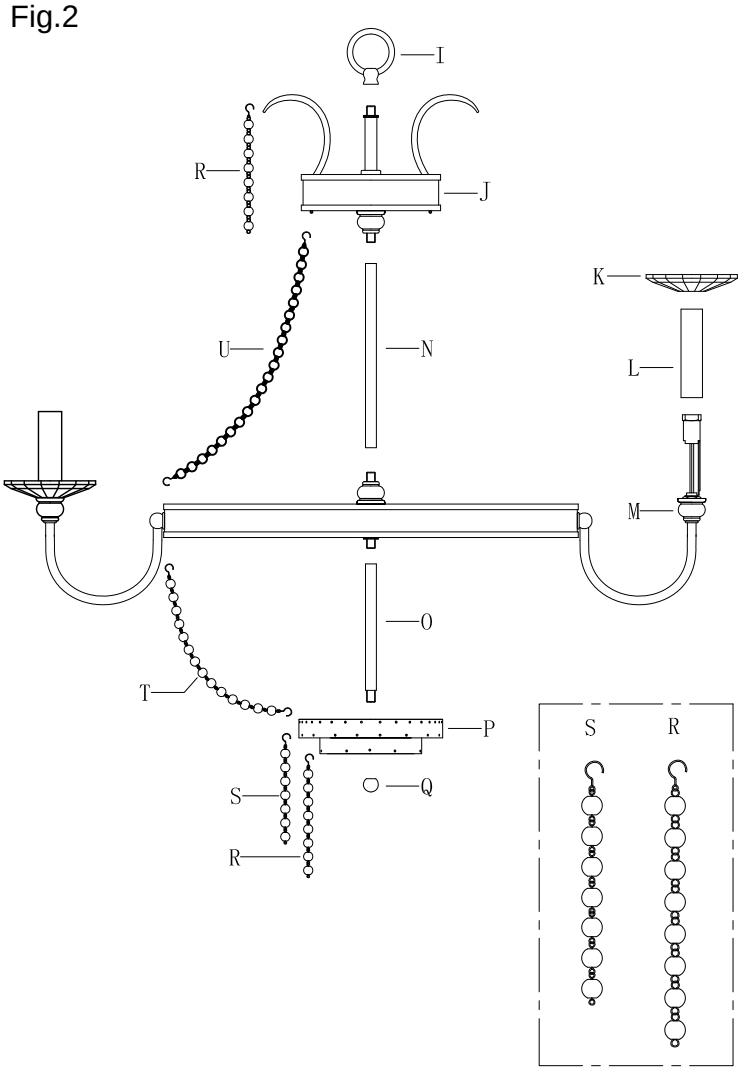

Fig.3

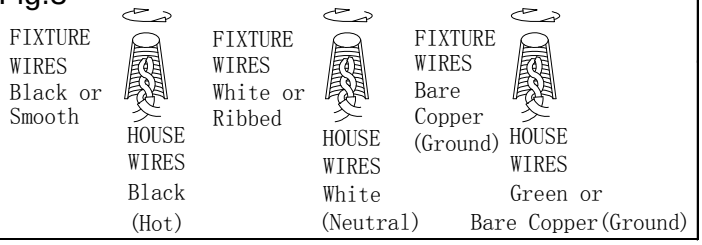

LIVEX LIGHTING EST. 1993

DOC20141251848