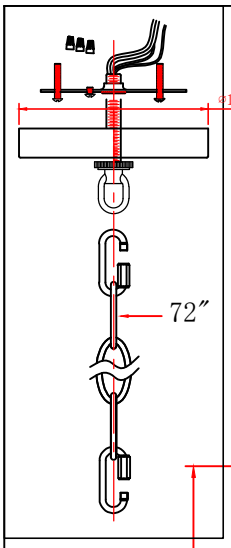

Max. 60W

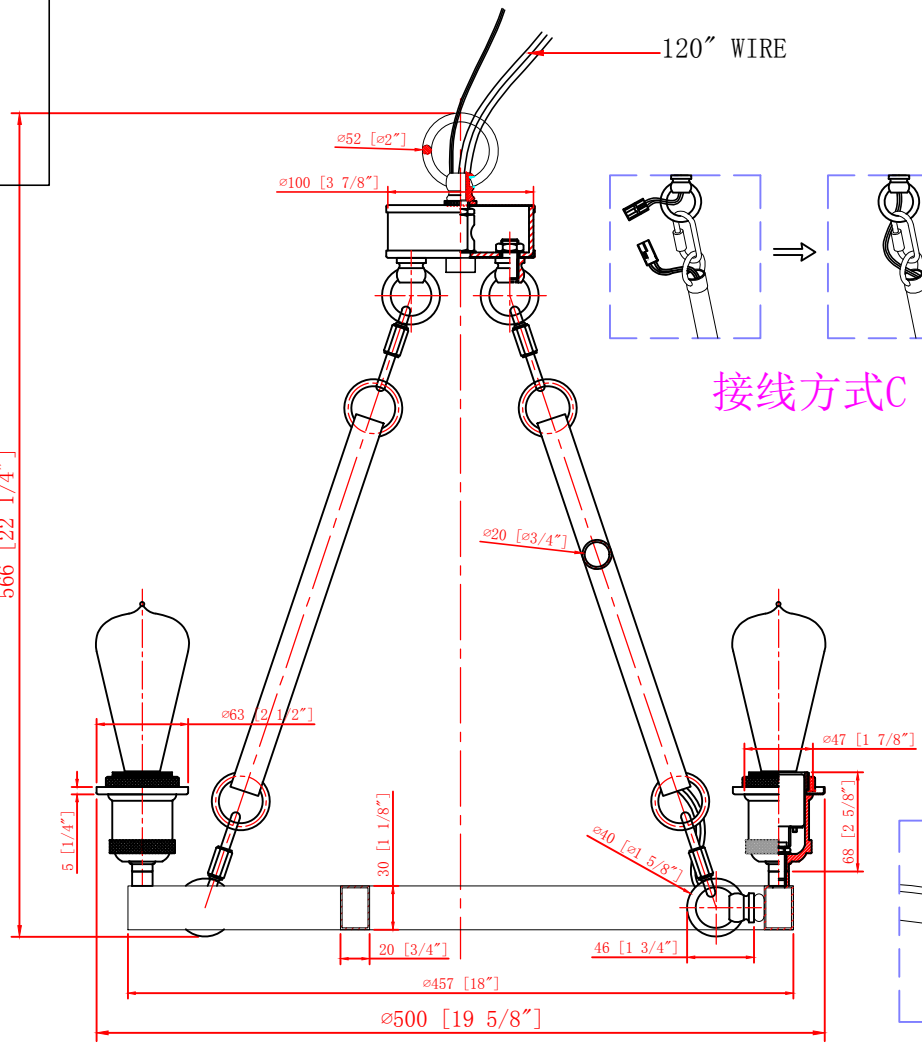

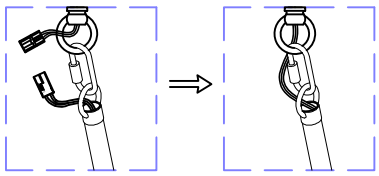

接线方式C

R&D
2019.11.20
DengMark

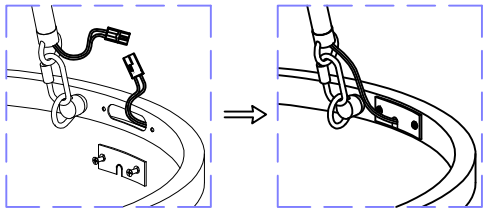

接线方式B

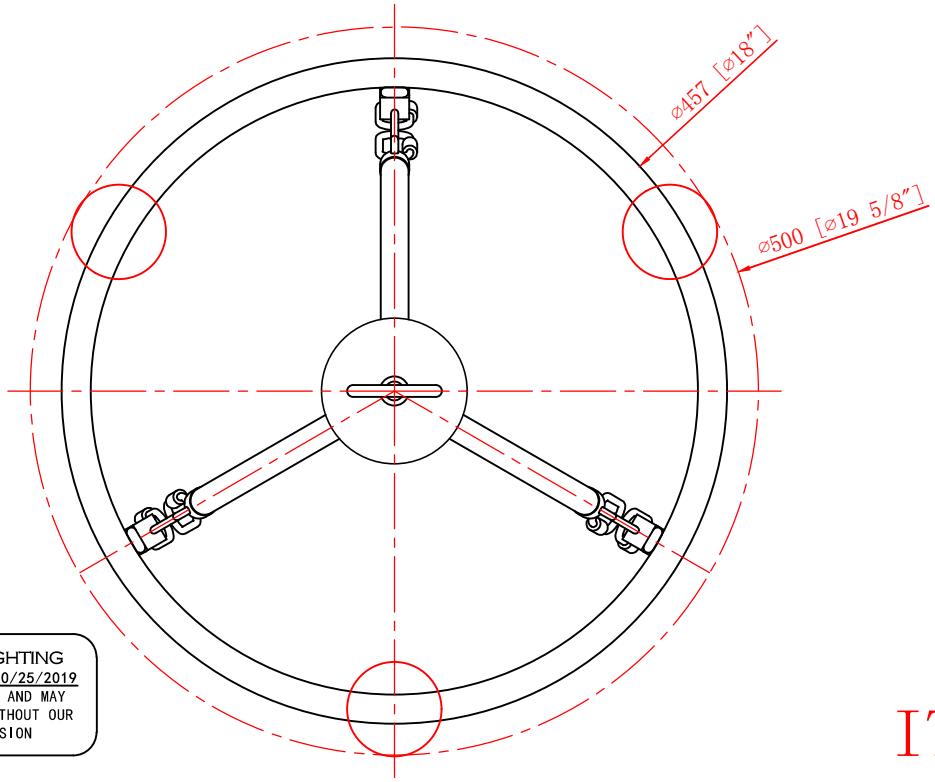

INNOVATIONS LIGHTING
DESIGN COPYRIGHT - 10/25/2019
ALL RIGHTS RESERVED AND MAY
NOT BE DUPLICATED WITHOUT OUR
WRITTEN PERMISSION

ITEM:820-BK