Type: _____
Project: _____
Catalog No: _____
Lamp/Wattage: _____

Product No. **FX-3752-24**

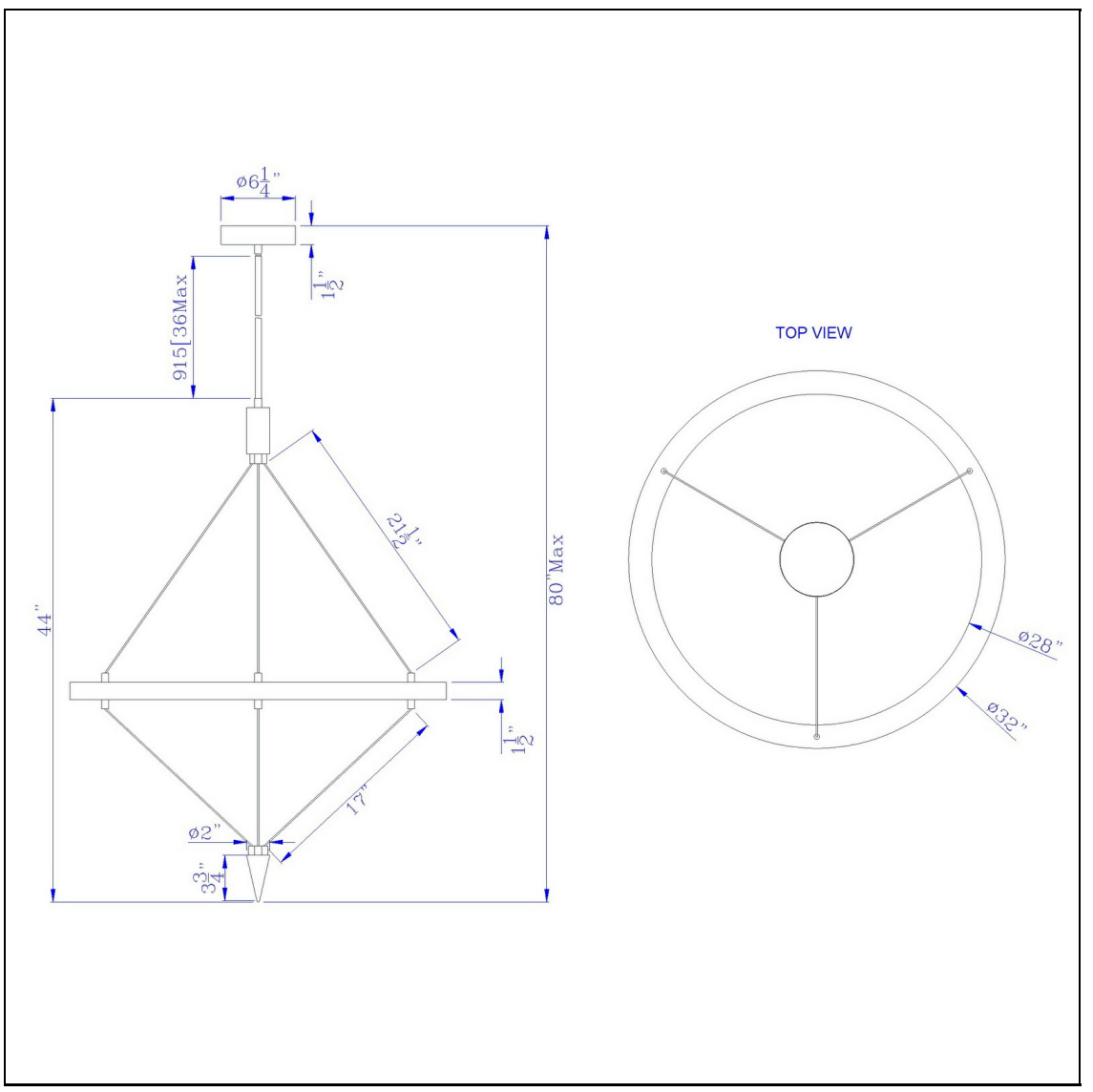

Description

Viterbo integrated dimmable LED pine wood pendant fixture with suspended steel braided wire. 24W, 1920 lumen, 3000K
Constructed with durable material
Intergrated dimmable LED
Furnished with Pine wood
Pendulant design
Suspension steel wire to create a sense of openness
Dimmable with Lutron Brand Dimmers: DVCL-153P, SCL-153P,AYCL-153P,CTCL-153P,DVCL-253P,DVSCLL-253P,SE
Update your space with this pinewood finish circular chandelier. It features a metal tip weighted ac

Technical Specifications

UPC	020193067284
Wattage	LED24W
CRI	80
Lumen	1920
Switch Type	Integrated LED
Bulb Base	Integrated LED
Number of Lights	Intergrated LED
Color	Pine

Carton 1 Dimensions	11.00 x 36.00 x 36.00
Carton 2 Dimensions	0.00 x 0.00 x 36.00
Package Dimensions	L: 36.00 W: 36.00 H: 11.00